LONG SEAMS	
COURSE	ORIENTATION
1	315°

*HOR – LEFT TO RIGHT

Ship loose items:
NONE

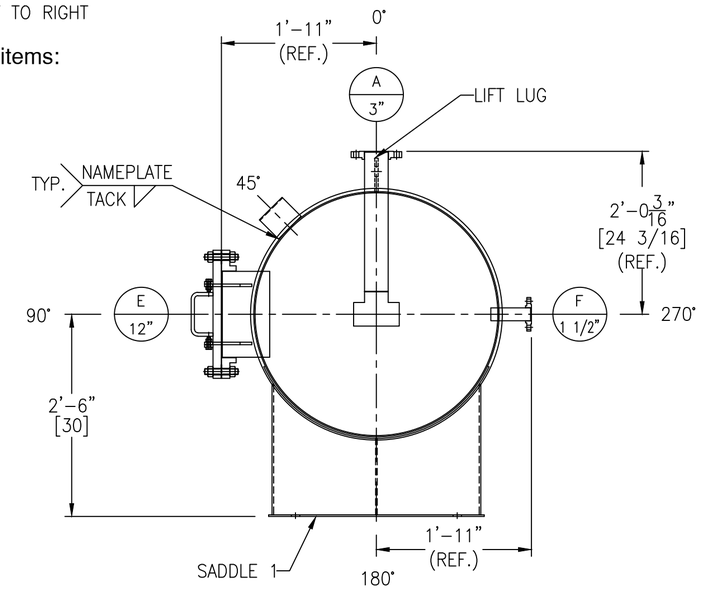

VIEW A-A

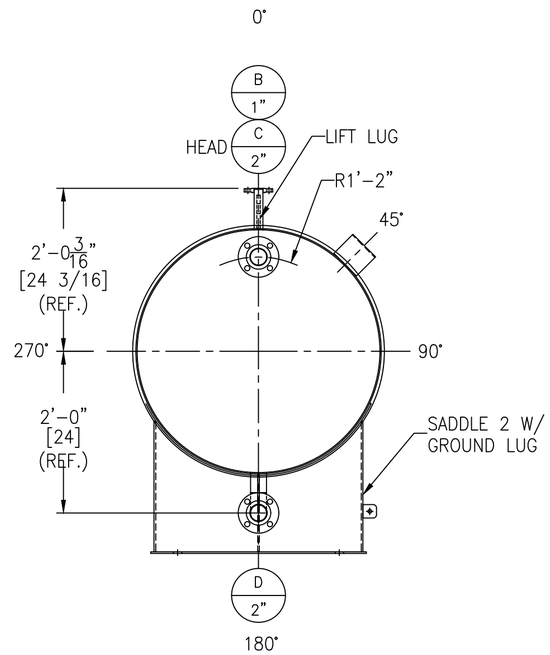

VIEW B-B

*NOTE: ALL ELEVATIONS ARE PULLED FROM WELD SEAM FOR EASE OF FABRICATION UNLESS OTHERWISE NOTED

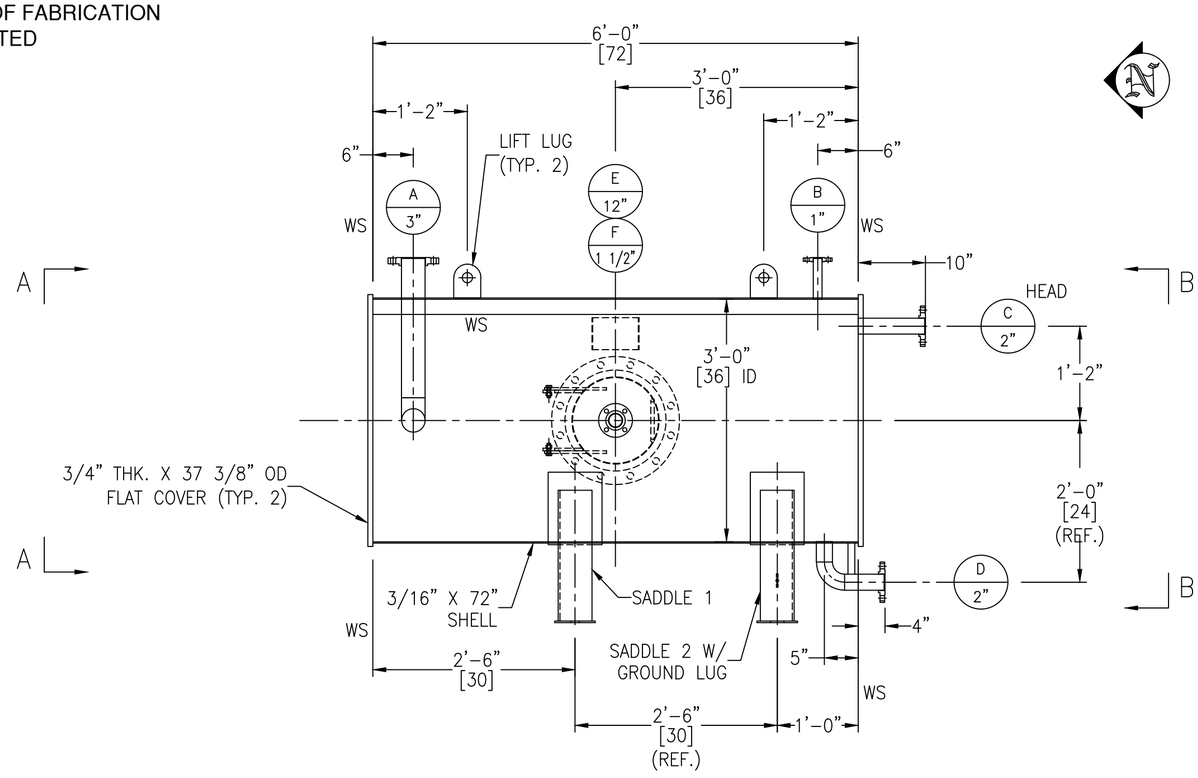

FC-14 GT-11

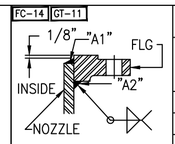

FIGURE NO. 1

FC-14 GT-11

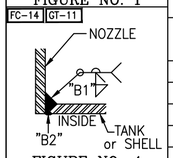

FIGURE NO. 4

FC-14 GT-11

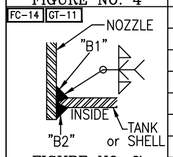

FIGURE NO. 7

FC-14 SA-30

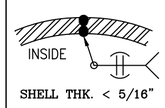

FIGURE NO. 9

FC-14

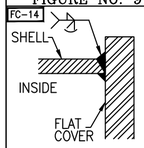

FIGURE NO. 10A

FC-14

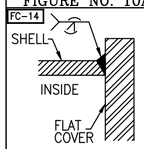

FOR CLOSING HEADS
FIGURE NO. 10B

NOZZLE SCHEDULE

MARK	SERVICE	SIZE	RATING	TYPE / STYLE	NECK SCHED.	PROJECTION EXT. (℄)	PROJECTION INT. (MIN.)	WELD FIGURE	REPAD SIZE (WIDTH X THK.)	WELD SIZE "A1"	WELD SIZE "A2"	WELD SIZE "B1"	WELD SIZE "B2"	WELD SIZE "C1"	WELD SIZE "C2"
A	INLET	3"	150#	RFSO	40S	6"	SEE DWG	1,7	–	1/4	1/4	3/16	1/8	–	–
B	VENT	1"	150#	RFSO	40S	6"	–	1,4	–	3/16	3/16	1/8	1/8	–	–
C	OVERFLOW	2"	150#	RFSO	80S	SEE DWG	–	1,4	–	1/4	1/4	3/16	1/8	–	–
D	OVERFLOW	2"	150#	RFSO	80S	SEE DWG	–	1,4	–	3/16	3/16	1/8	1/8	–	–
E	HANDHOLE	12"	150#	RFSO W/ HINGE & HANDLE	40S	4 13/16"	1"	1,7	–	5/16	1/2	3/16	1/8	–	–
–	–	–	–	–	–	–	–	–	–	–	–	–	–	–	–
–	–	–	–	–	–	–	–	–	–	–	–	–	–	–	–
F	INSTRUMENT	1 1/2"	150#	RFSO	40S	4 13/16"	1"	1,7	–	3/16	3/16	1/8	1/8	–	–

MATERIALS OF CONSTRUCTION

	VESSEL
SHELL	SA240-316/316L
FLAT HEADS	SA240-316/316L
STIFFENERS	–
NOZZLE NECKS	SA312-316/316L & SA403-316/316L WPB
NOZZLE FLANGES	SA182F-316/316L
MANWAY NECKS	–
MANWAY FLANGES	–
GASKETS	KLINGER THERMOSEAL 400 OR EQUIVALENT
BOLTS/STUDS	SA-193 B7 (ZINC PLATED)
NUTS	SA-194 2H (ZINC PLATED)
REPADS	SA240-316/316L
COUPLINGS	–
SUPPORTS/HOLD DOWNS	SA240-304/304L
LIFTING LUGS	SA240-304/304L
VACUUM RINGS	–
INSULATION RINGS	–
GROUND LUG	SA240-304/304L
BAFFLE	–
LADDER	–
TANK CLIPS (LADDER)	–
HANDRAIL	–
HANDRAIL CLIPS	–
PLATFORM	–
PLATFORM CLIPS	–
DIPTUBE SUPPORT	–
JACKET SHELL	–
JACKET HEADS	–
JACKET NOZZLE NECKS	–
JACKET NOZZLE FLANGES	–

DESIGN DATA

	VESSEL
DESIGN AND FAB. CODE	ASME SEC. VIII, DIV. 1
CERT. STAMP REQ'D.	NO
DESIGN PRESSURE	15 PSIG / –1.6" WC
DESIGN TEMPERATURE	300° F
MIN. DESIGN METAL TEMP.	–20° F @ 15 PSIG
OPERATING PRESSURE	1" WC
OPERATING TEMPERATURE	104° F
JOINT EFFICIENCY COVERS	1.00
JOINT EFFICIENCY SHELL	0.70
CORROSION ALLOWANCE	0.04"
SPECIFIC GRAVITY	1.0
EARTHQUAKE ZONE	Ss = (0.089) S1 = (0.045)
WIND LOAD	130 MPH
STRESS RELIEF	NOT REQ'D
RADIOGRAPHIC EXAM	NOT REQ'D
DYE PENETRANT EXAM	NOT REQ'D
MAGNETIC PARTICLE EXAM	NOT REQ'D
HYDROSTATIC TEST	20 PSIG / GAUGE #11
PNEUMATIC TEST	NOT REQ'D
JKT HYDRO TEST	–
JKT DESIGN AND FAB. CODE	–
JKT CERT. STAMP REQ'D.	–
JKT DESIGN PRESSURE	–
JKT DESIGN TEMPERATURE	–
JKT MIN. DESIGN METAL TEMP.	–
JKT OPERATING PRESSURE	–
JKT OPERATING TEMPERATURE	–
JKT JOINT EFFICIENCY HEADS	–
JKT JOINT EFFICIENCY SHELL	–

VESSEL FINISH

INTERIOR WELD TREATMENT:	SAV TANK STANDARD
EXTERIOR WELD TREATMENT:	SAV TANK STANDARD
SAV TANK FINISHING STANDARD:	SEE NOTE 6
INSULATION:	N/A
PAINTING:	N/A

VESSEL CAPACITY AND WEIGHTS

OPERATING CAPACITY	–
FULL CAPACITY	300 GAL.
EMPTY SHIPPING WEIGHT	1500 LBS.
WEIGHT FULL OF WATER	4200 LBS.
WEIGHT FULL OF PRODUCT	4200 LBS.

ASME SECT. VIII, DIV. 1
2023 EDITION

ENG. _____ DATE: _____
Q.C. _____ DATE: _____
A.I. _____ DATE: _____

This drawing is issued for customer approval. please review, make approval changes (if any) in red. check the appropriate box, sign & date.

- ☐ Approval – no changes. Please proceed with fabrication.
- ☐ Approved as noted. Please proceed with fabrication
- ☐ Not approved. Please make changes and resubmit.

Customer signature _____ Date _____

GENERAL NOTES

1.) COVER ALL FLANGES, OPENINGS & MACHINED SURFACES PRIOR TO SHIPMENT UNLESS OTHERWISE NOTED.
2.) BOLT HOLES TO STRADDLE 0° & 180° UNLESS OTHERWISE NOTED.
3.) REPADS TO HAVE (1) ø1/4" NPT TELL-TALE HOLES FOR PNEUMATIC TESTING AT 2 PSIG FOR PRESSURE RETAINING PARTS. ALL OTHER REPADS TO HAVE (1) ø1/4" WEEP HOLE AT LOWEST POINT ON PAD.
4.) ASME CODE VESSELS TO BE IN ACCORDANCE WITH UG-80 & UG-81. TOLERANCES: +/- 1/8" FOR DIMENSIONS AND +/- 2 DEGREES FOR ORIENTATIONS.
5.) ASME MATERIALS TO CONFORM TO THE FOLLOWING: FLANGES – B16.5, FITTINGS – B16.9 & COUPLINGS – B16.11.
6.) PICKLE ALL EXTERIOR WELDS. PASSIVATE INTERIOR & EXTERIOR OF VESSEL.

REV	D.BY	C.BY	DATE	DESCRIPTION
2	MM	RS	4/1/24	AS BUILT CERTIFIED
1	MM	RS	3/18/24	APPROVAL REV 1
0	MM	RS	1/29/24	APPROVAL

1 REVISIONS

Savannah Tank & Equipment Corp.
1517 Telfair Road, Savannah, GA 31415
(912) 233-8902

DRAWN BY: MM
CHK'D BY: RS
APPROVED BY: NP
SCALE: 3/4" = 1'-0"

PCS PHOSPHATE COMPANY, INC.
S33 HAA STRIPPER SEPARATOR
EQUIP. #
CUST. PO #2101214131

DRAWING NO.: 002-24-1 SHT 1 OF 3 REV. SET 2